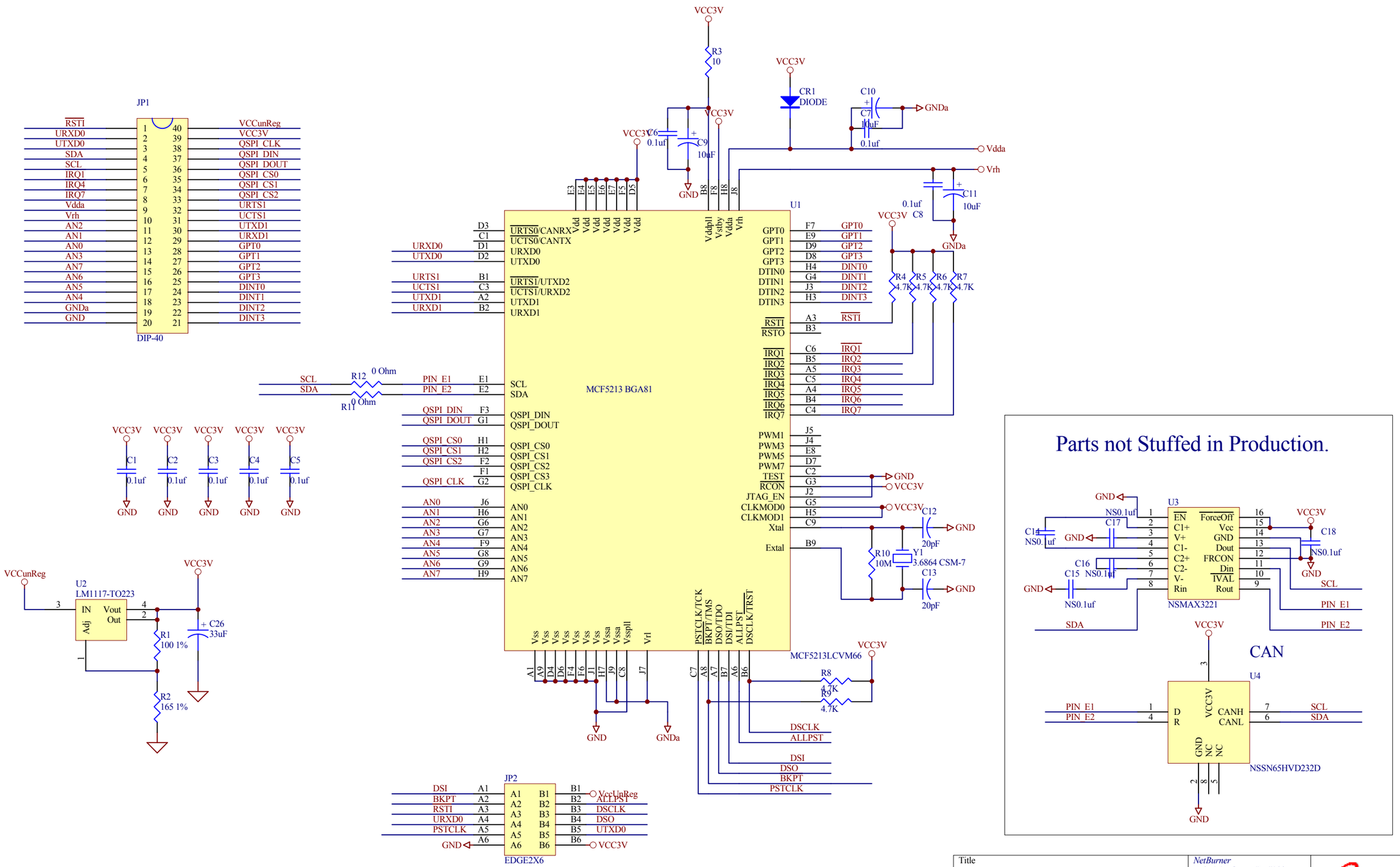
JP1
DIP-40
U1
MCF5213 BGA81
MCF5213LCVM66
U2
LM1117-TO223
U3
NSMAX3221
U4
NSSN65HVD232D
JP2
EDGE2X6
CAN
Parts not Stuffed in Production.
VCC3V
GND
GNDa
Vdda
Vrh
VCCunReg
R3 10
CR1 DIODE
C10
C7 10uF
C9 10uF
C6 0.1uf
C11 10uF
C8 0.1uf
R12 0 Ohm
R11 0 Ohm
R4 4.7K
R5 4.7K
R6 4.7K
R7 4.7K
R8 4.7K
R9 4.7K
R10 10M
Y1 3.6864 CSM-7
C12 20pF
C13 20pF
C1 0.1uf
C2 0.1uf
C3 0.1uf
C4 0.1uf
C5 0.1uf
C26 33uF
R1 100 1%
R2 165 1%
C14 NS0.1uf
C17 NS0.1uf
C16 NS0.1uf
C15 NS0.1uf
C18 NS0.1uf
SCL
SDA
PIN_E1
PIN_E2
DSCLK
ALLPST
DSI
DSO
BKPT
PSTCLK
Title
MOD5213
Size: A
Number:
Revision: 1.2
Date: 23-Feb-2006
Sheet 1 of 1
NetBurner
5405 Morehouse Dr #200
San Diego, CA 92121
USA