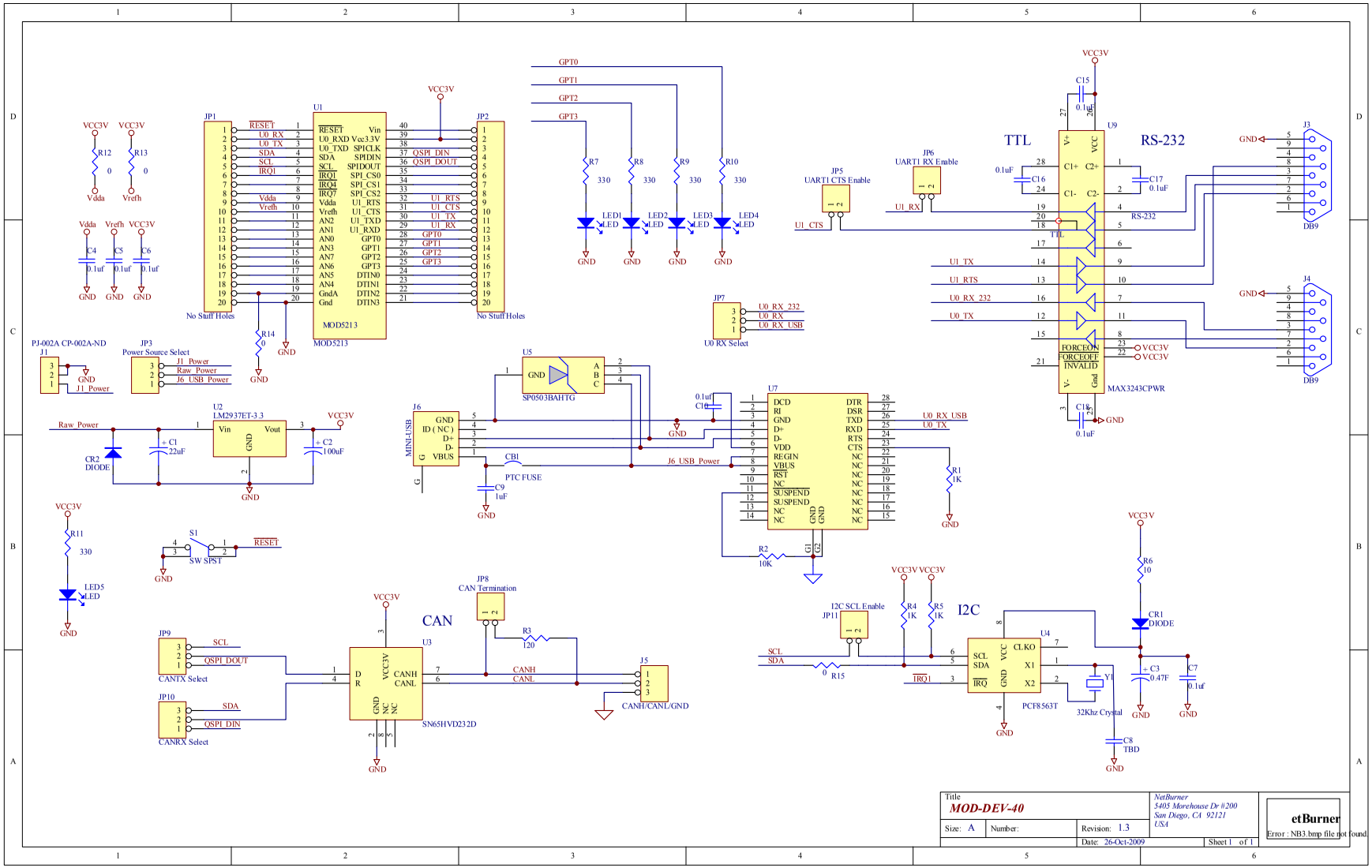
MOD-DEV-40
NetBurner
5405 Morehouse Dr #200
San Diego, CA 92121
USA
Size: A
Number:
Revision: 1.3
Date: 26-Oct-2009
Sheet 1 of 1
etBurner
Error : NB3.bmp file not found
MOD5213
No Stuff Holes
TTL
RS-232
MAX3243CPWR
DB9
CAN
SN65HVD232D
I2C
PCF8563T
32Khz Crystal
SP0503BAHTG
LM2937ET-3.3
MINI-USB
PTC FUSE
SW SPST
CANTX Select
CANRX Select
CAN Termination
CANH/CANL/GND
UART1 RX Enable
UART1 CTS Enable
I2C SCL Enable
U0 RX Select
Power Source Select
PJ-002A CP-002A-ND
CR2 DIODE
CR1 DIODE
VCC3V
GND